OFFICINA MECCANICA
FERRARI & CARENA s.r.l.
Via Scodeggio 1 - 10078 - Venaria Reale (TO) - Italy
Tel. +39 011 49 66 88 - Fax +39 011 459 42 20
www.ferraricarena.it e-mail: info@ferraricarena.it
PARTITA IVA E CODICE FISCALE 00736690017

COMPATIBLE SPARE PARTS FOR FINE- BLANKING FEINTOOL PRESSES

STRUTTURE PRESSE
MAIN FRAMES

STRUTTURE RILAVORATE
REVAMPING FRAMES

STRUTTURA HFA-7000 NUOVA COSTRUZIONE
HFA-7000 PLUS MAIN FRAME NEW CONSTRUCTION

MAIN FRAME OF HFA-4000 FEINTOOL PRESS

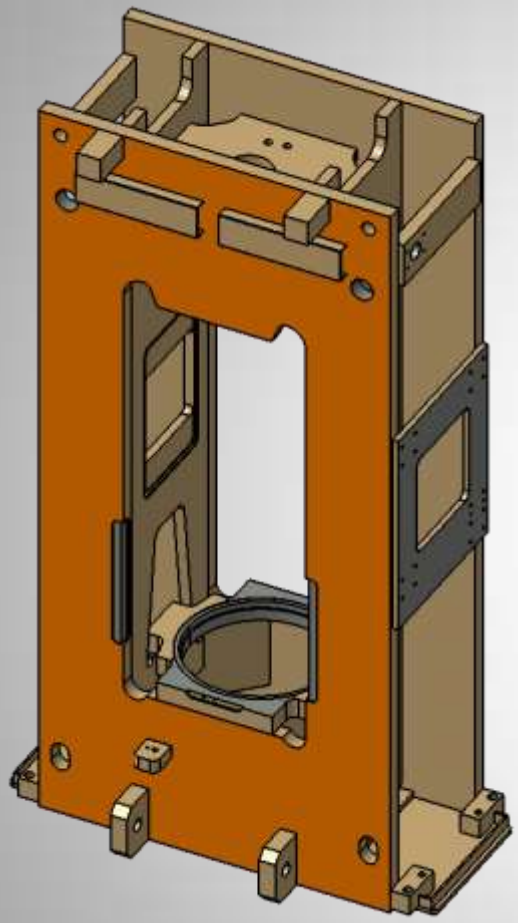

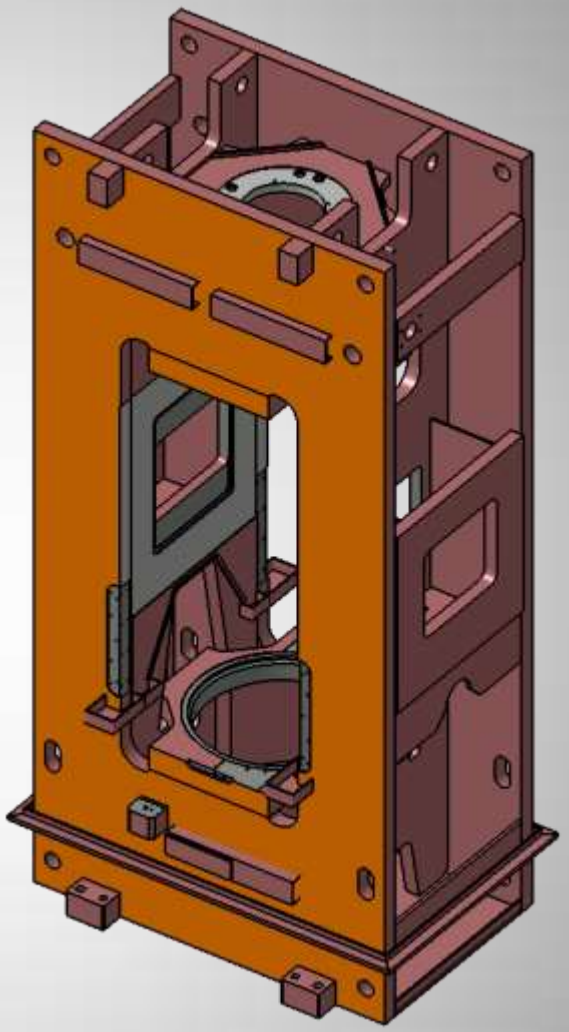

MAIN FRAME OF HFA-6300 FEINTOOL PRESS

MAIN FRAME OF HFA-7000 PLUS FEINTOOL PRESS

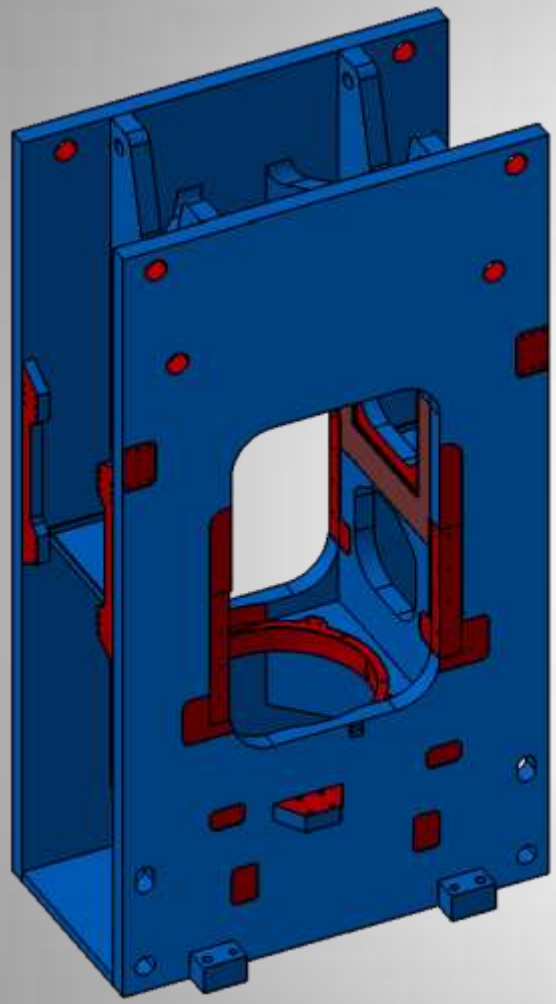

MAIN FRAME OF A FEINTOOL HFA-1100 PLUS PRESS

OLD MAIN FRAME OF HFA-14000 FEINTOOL PRESS

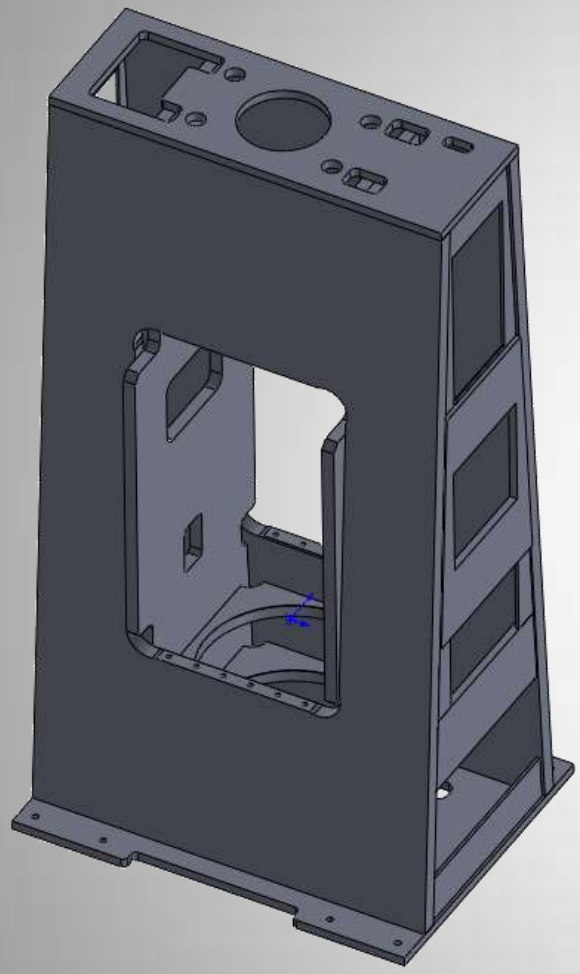

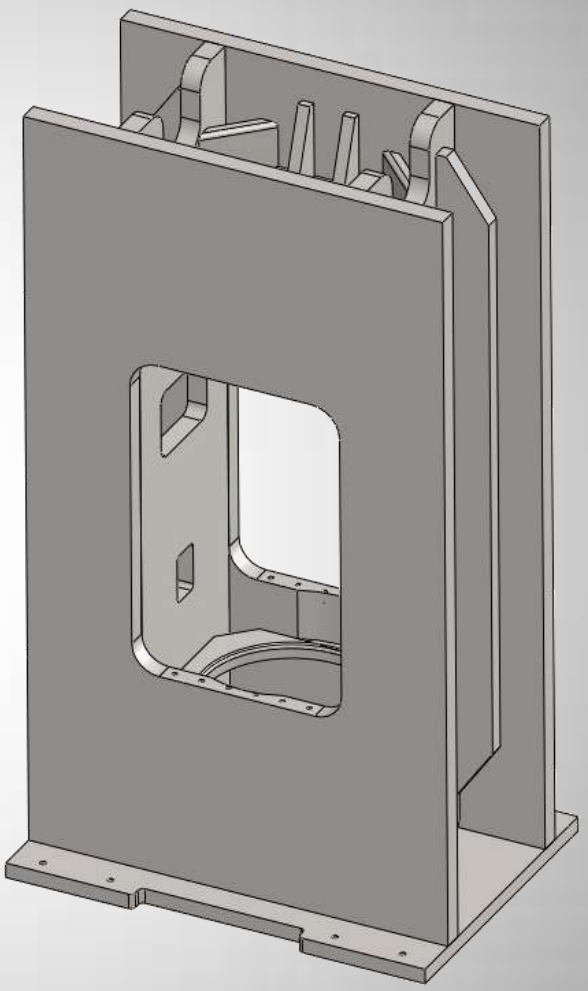

NEW MAIN FRAME OF A FEINTOOL HFA-14000 PRESS

ASSEMBLY OF A FEINTOOL HFA-4000 PRESS

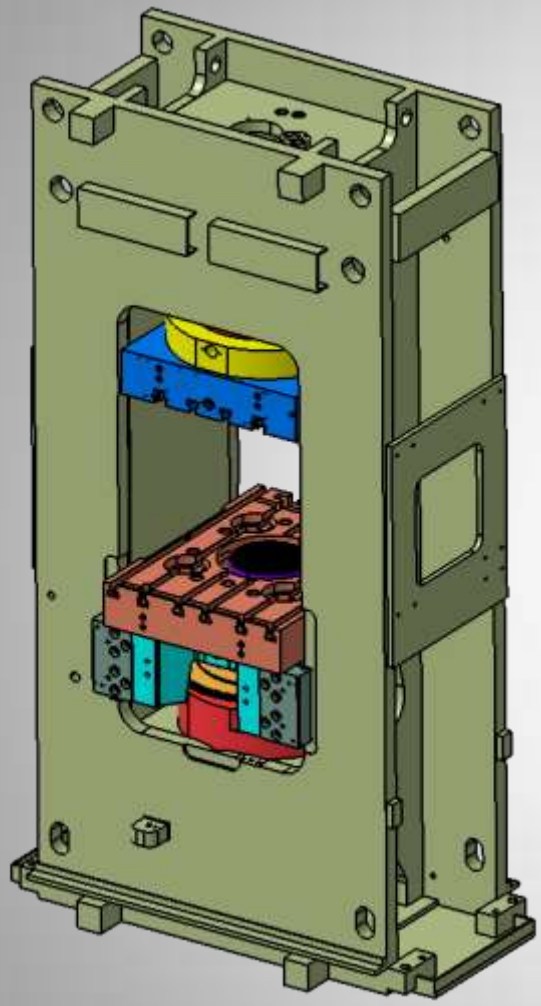

ASSEMBLY OF A FEINTOOL HFA-6300 PRESS

ASSEMBLY OF A FEINTOOL HFA-7000 PLUS PRESS

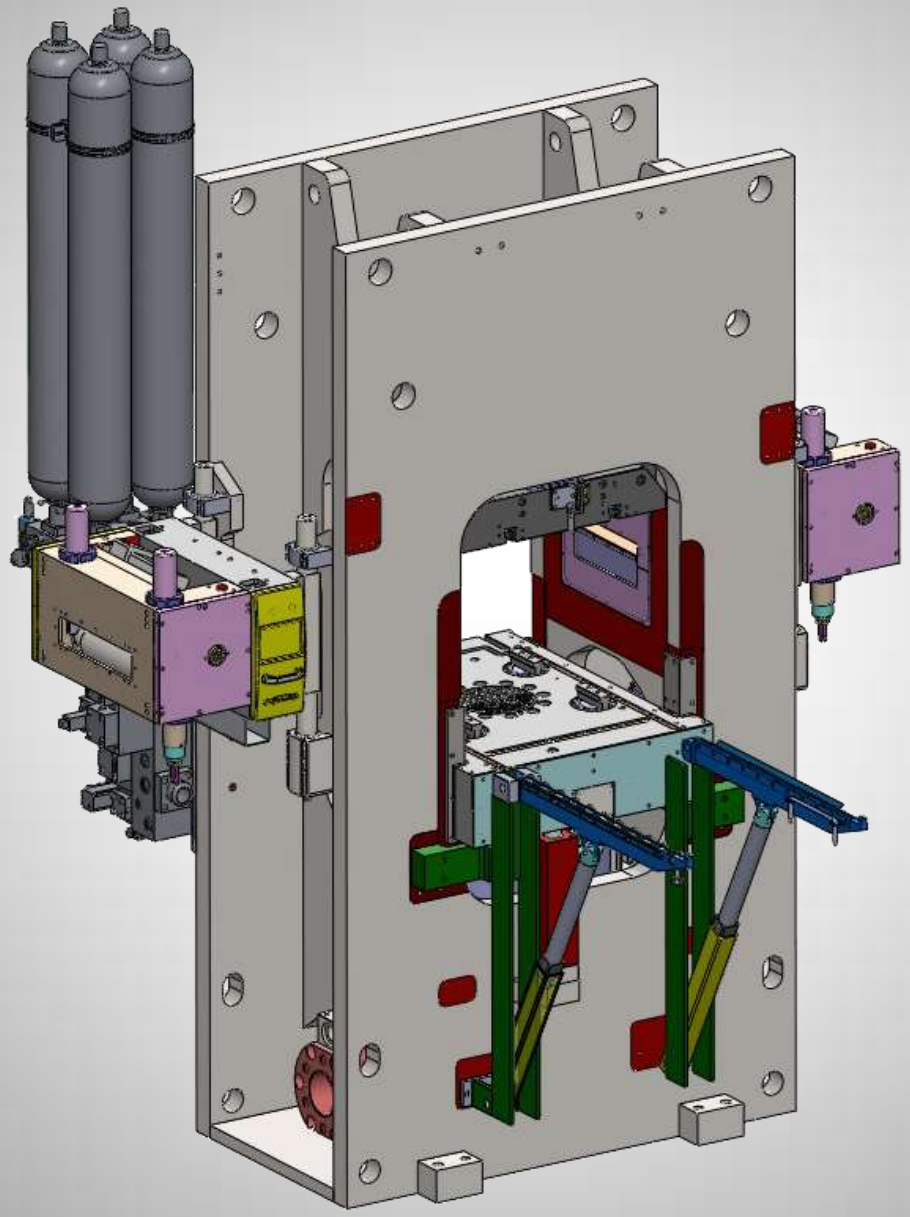

ASSEMBLY OF A FEINTOOL HFA-14000 PRESS

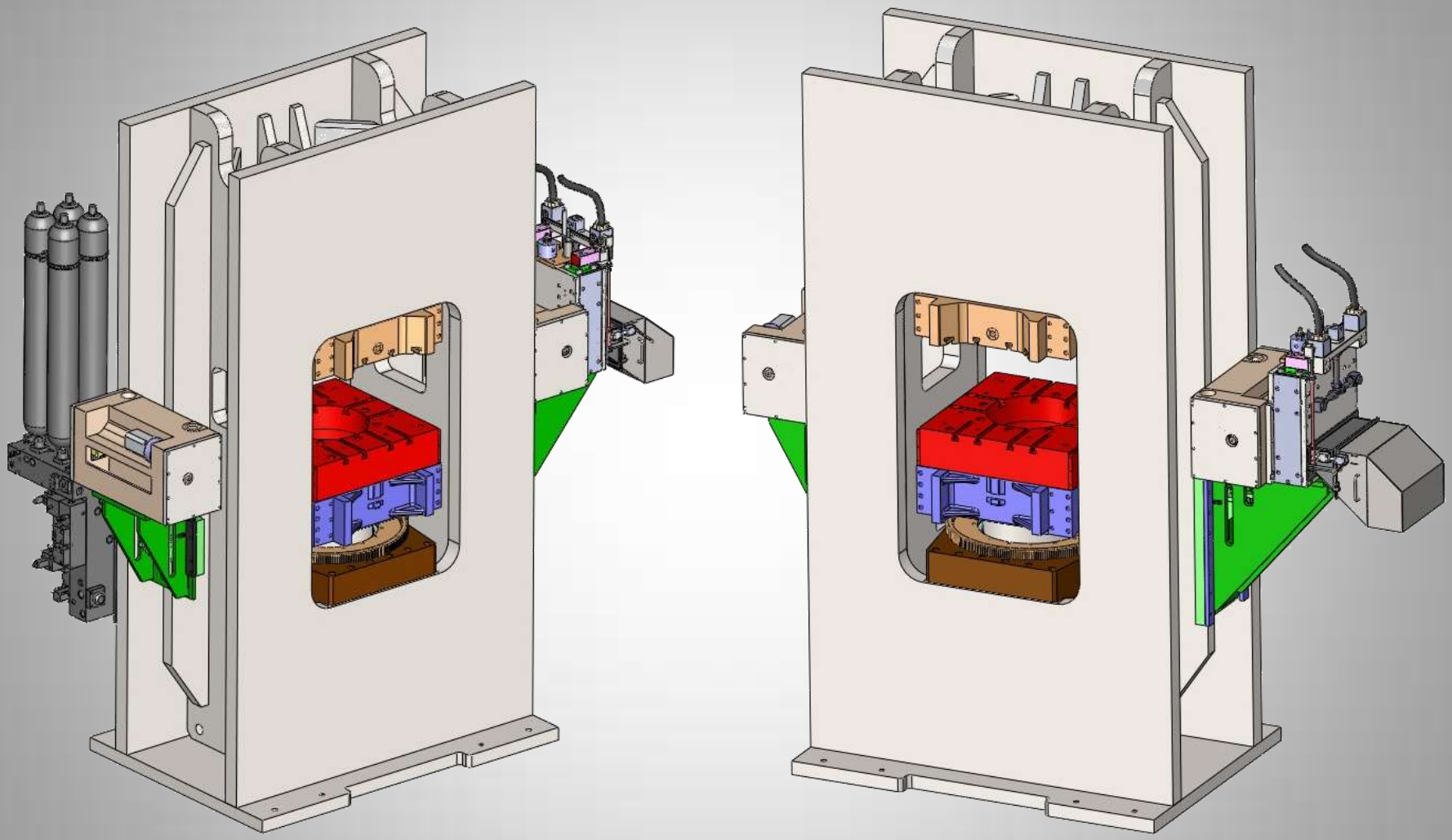

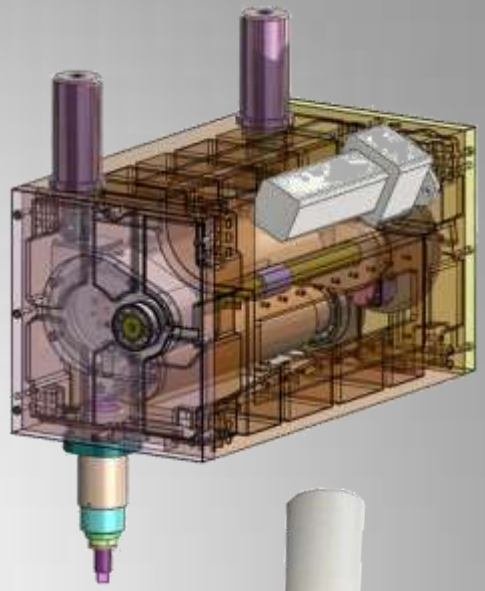

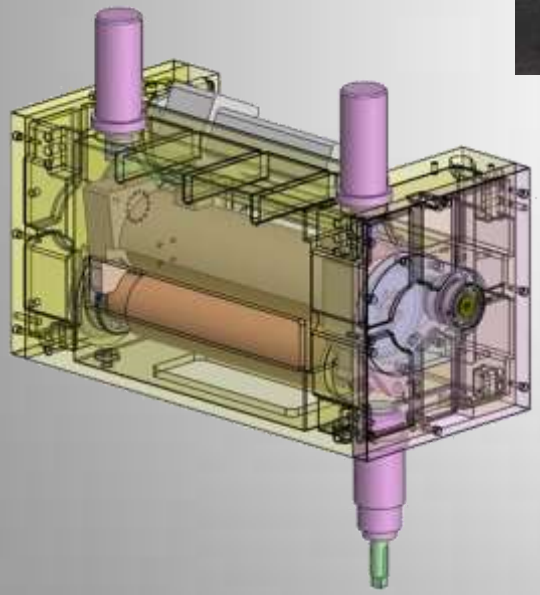

HFA 2800 - 4000 - 6300 -7000 PLUS - 8000 - 8800 -1100 - 14000
FEEDING LINES

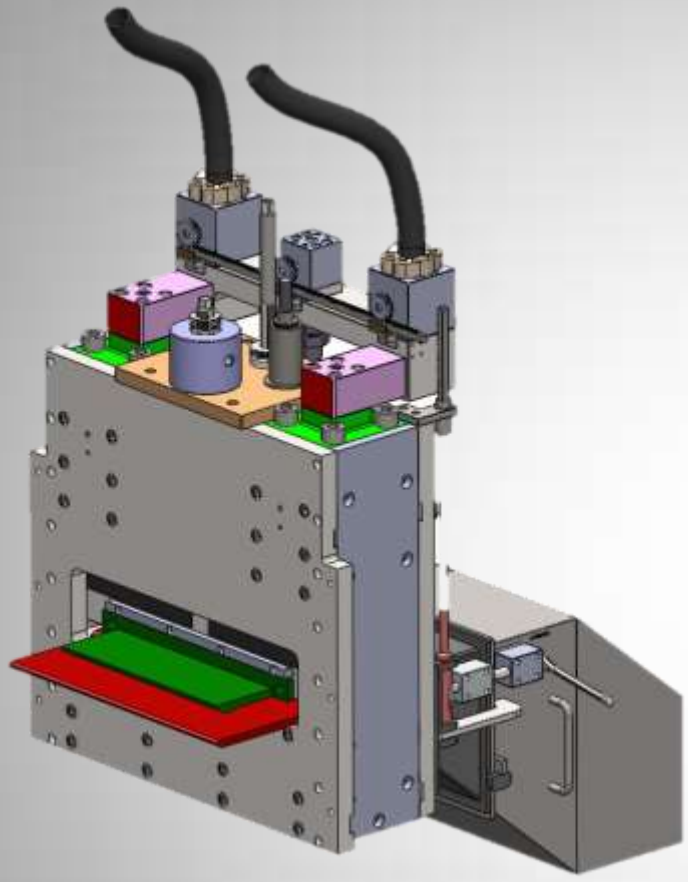

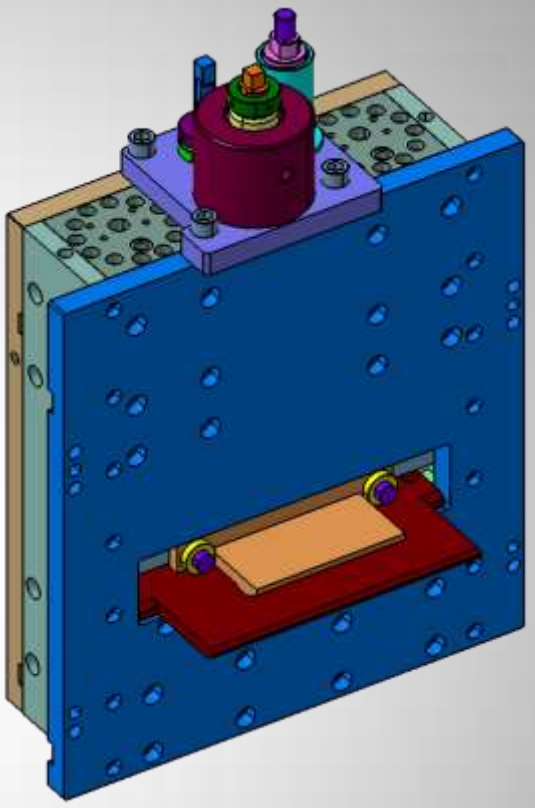

HFA 2800 - 4000 - 6300 -7000 - 8000 - 8800 - 11000 - 14000
SCRAP CUTTING MACHINES

IMPIANTI DI LUBRIFICAZIONE A RULLI CON ESTRAZIONE A LAMIERA INSERITA
ROLLS LUBRICATOR OPENABLE WITH INSERTED METAL SHEET

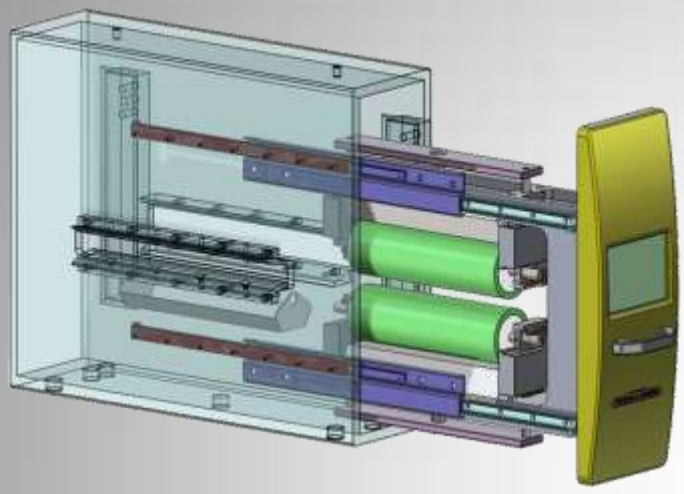

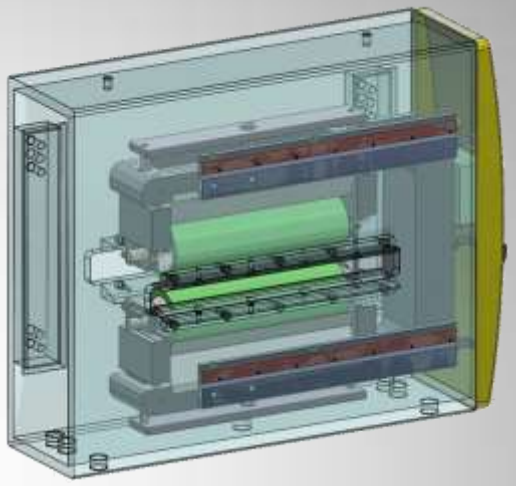

APERTO
OPEN

CHIUSO
CLOSED

IMPIANTI DI LUBRIFICAZIONE A SPRUZZO CON ESTRAZIONE A LAMIERA INSERITA
SPRAY LUBRICATOR OPENABLE WITH INSERTED METAL SHEET

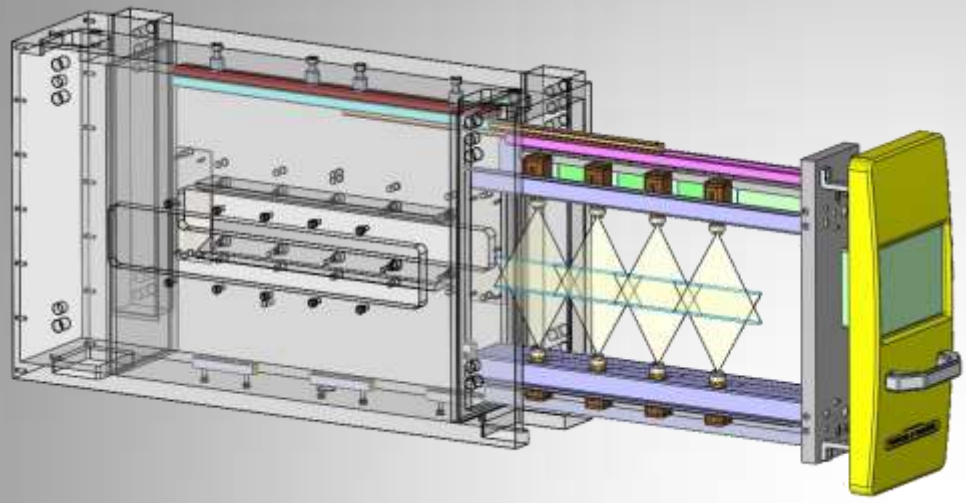

APERTO
OPEN

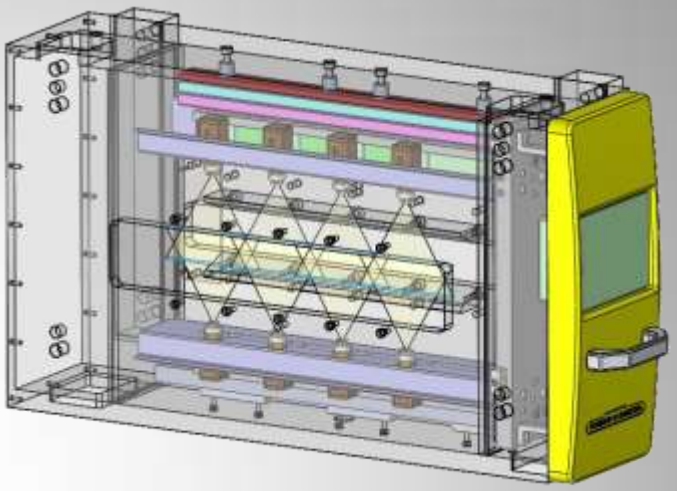

CHIUSO
CLOSED

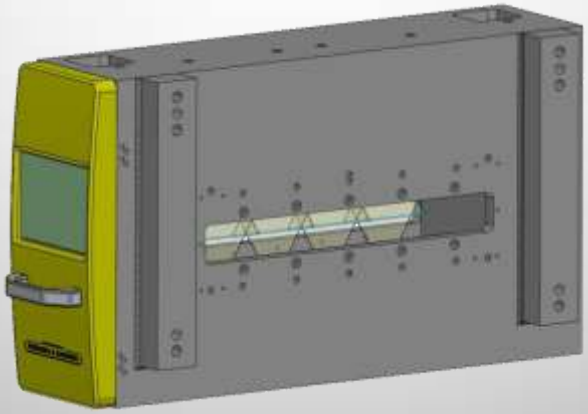

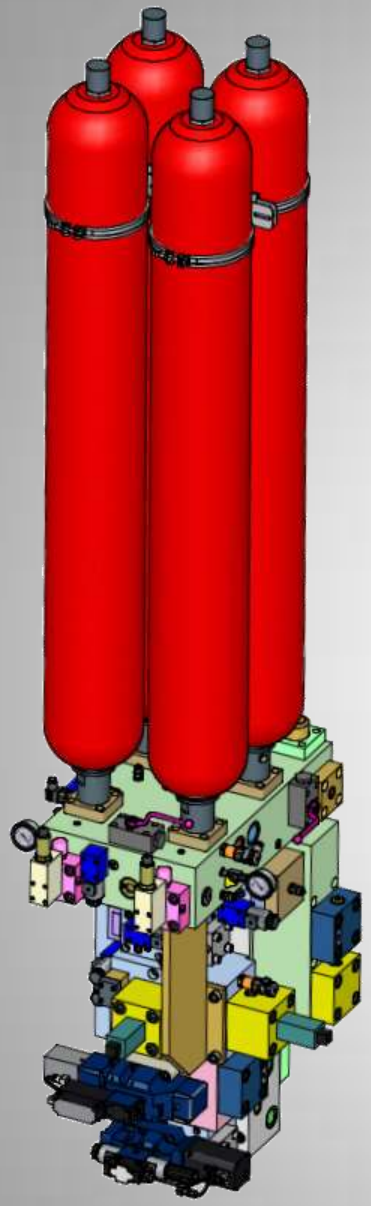

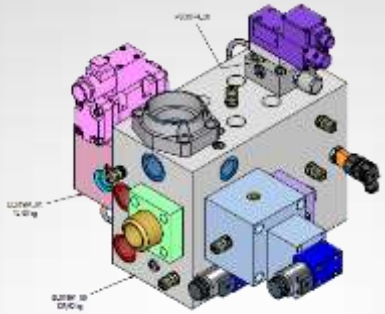

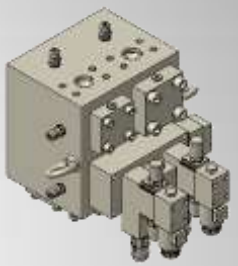

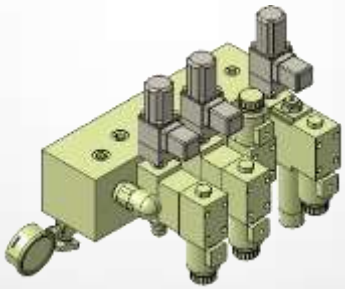

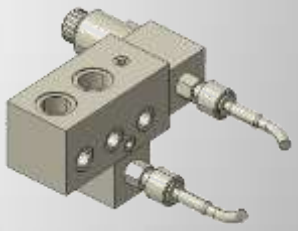

HFA 4000 - 6300 -7000 - 8000 - 8800 - 11000 - 14000 HYDRAULIC BLOCKS

HFA 4000 - 6300 -7000 - 8000 - 8800 - 11000 – 14000 HYDRAULIC BLOCKS

GRUPPI IDRAULICI
HYDRAULIC GROUPS

BLOCCO CENTRALINA
CONTROL UNIT BLOCK

BLOCCO IDRAULICO PRINCIPALE
MAIN HYDRAULIC UNIT

GRUPPI IDRAULICI
HYDRAULIC GROUPS

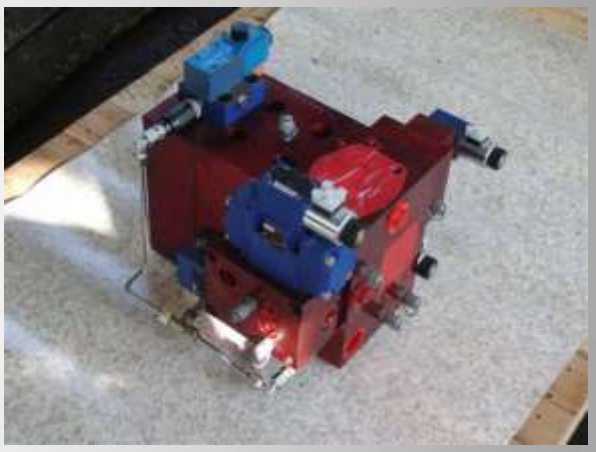

BLOCCO IDRAULICO PREMILAMIERA
COUNTER-HOLDER HYDRAULIC UNIT

CENTRALINA PRINCIPALE
MAIN CONTROL UNIT

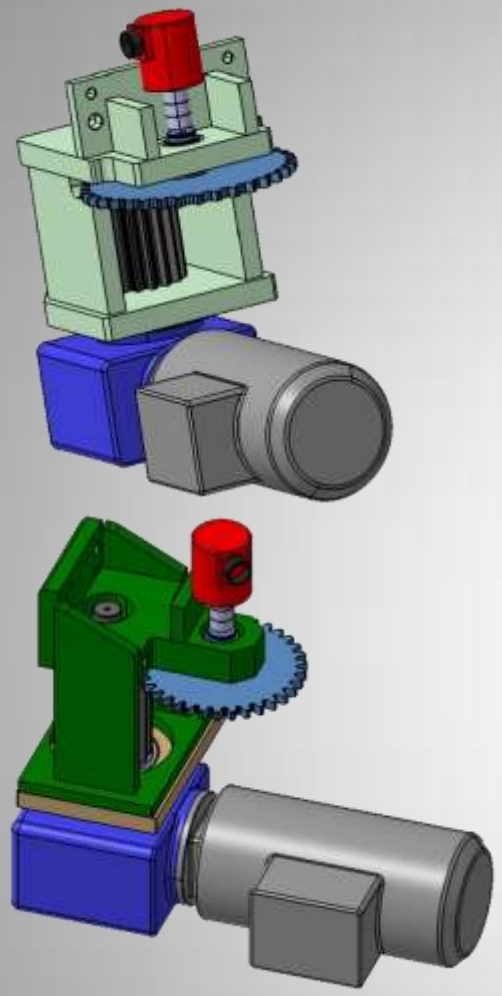

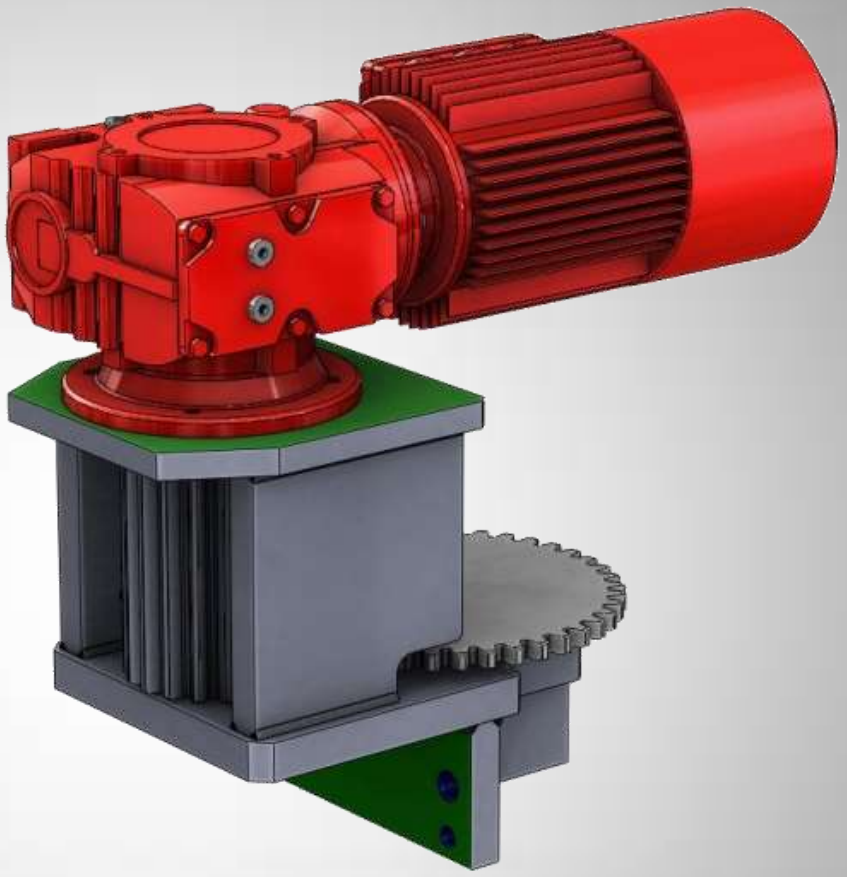

HFA 4000 - 6300 -7000 - 8000 - 8800 - 11000 - 14000
STROKE ADJUSTEMENT SYSTEM

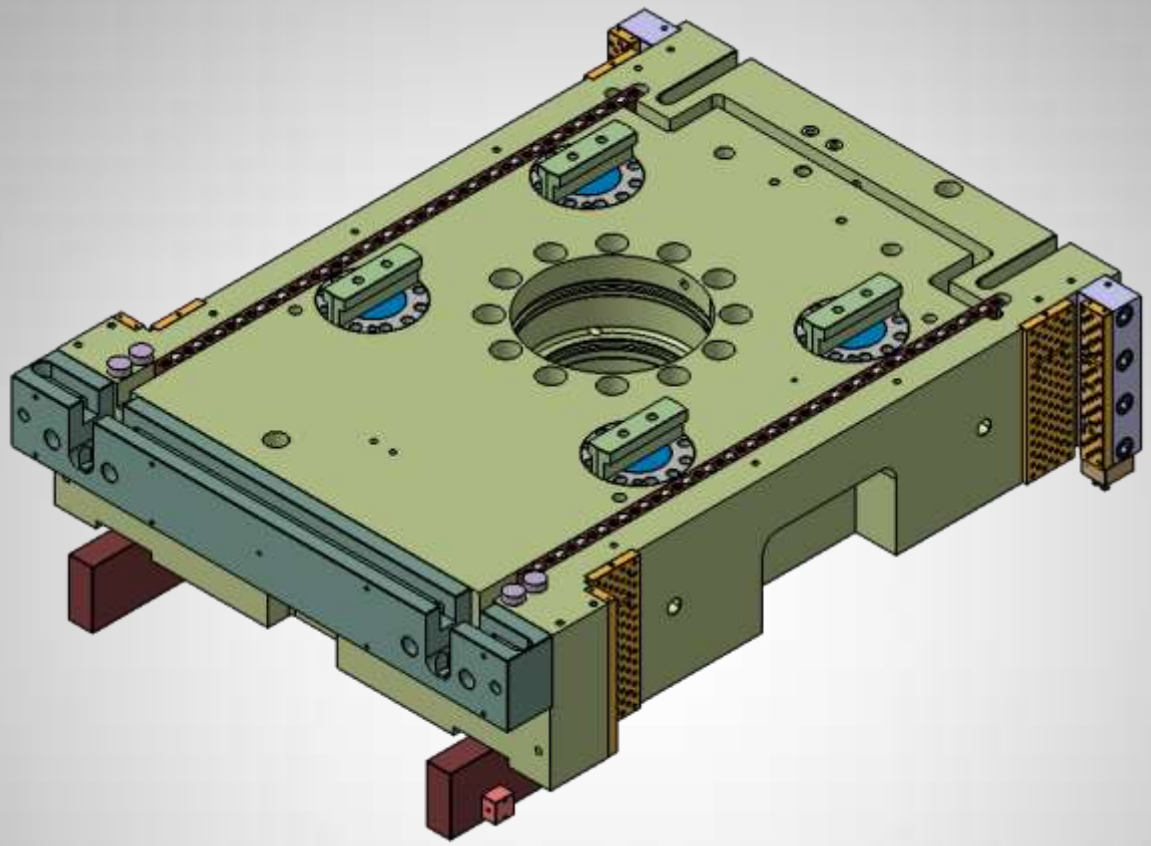

HFA-7000 PLUS
ASSEMBLY OF LOWER PLATE

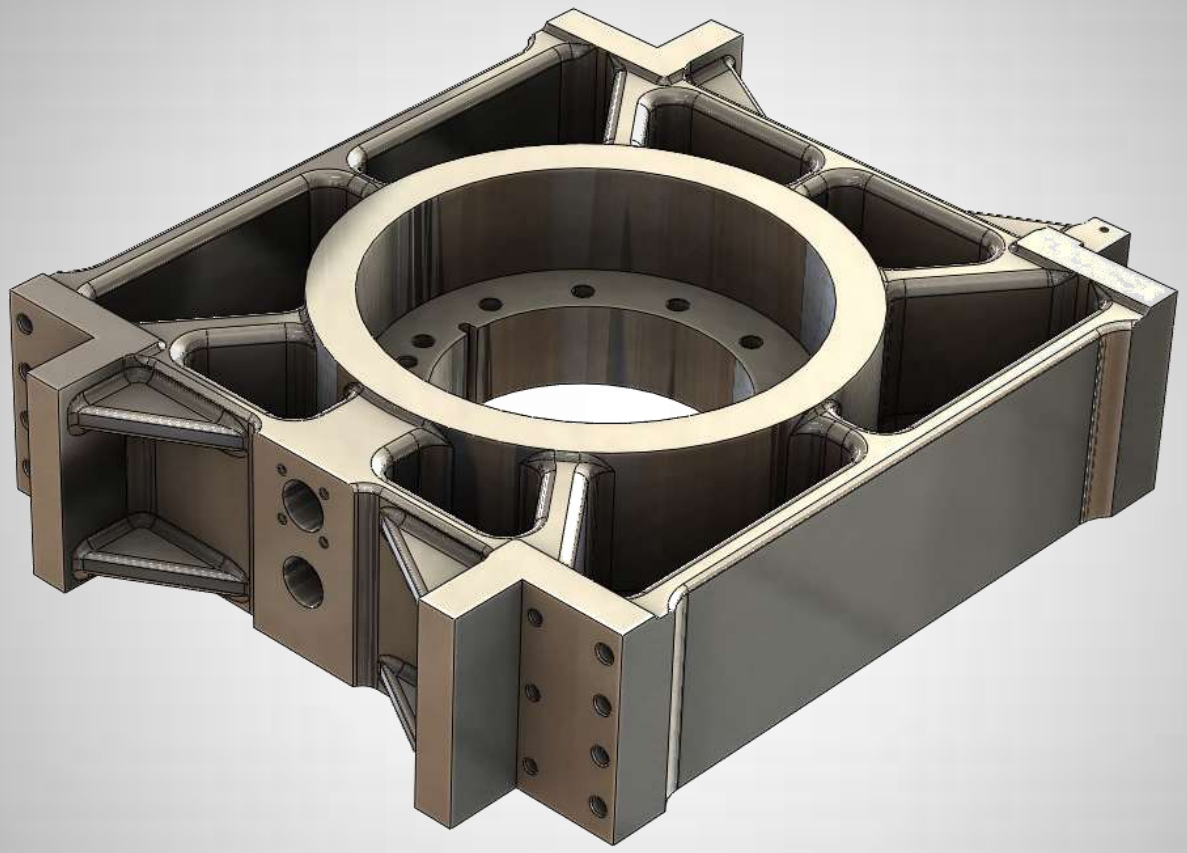

SLITTA INFERIORE HFA-14000
LOWER SLIDE HFA-14000

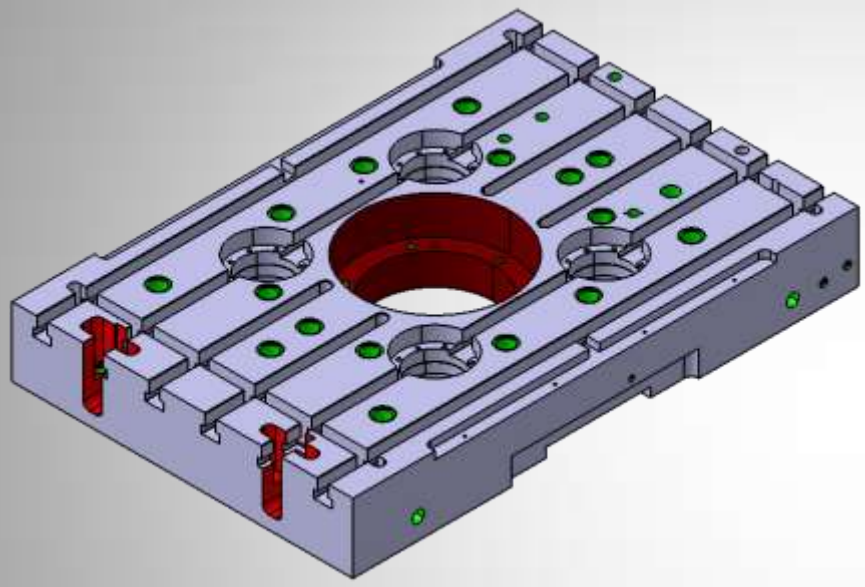

HFA-6300 LOWER PLATE

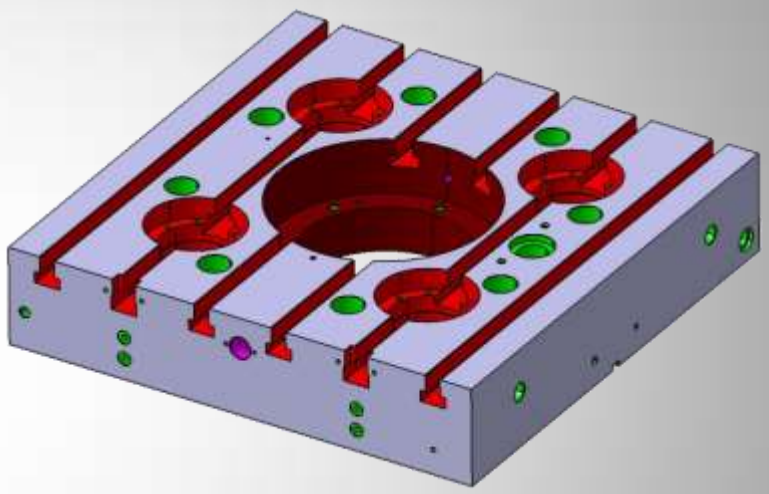

HFA-6300 UPPER PLATE

HFA-7000 LOWER DIE HOLDER PLATE

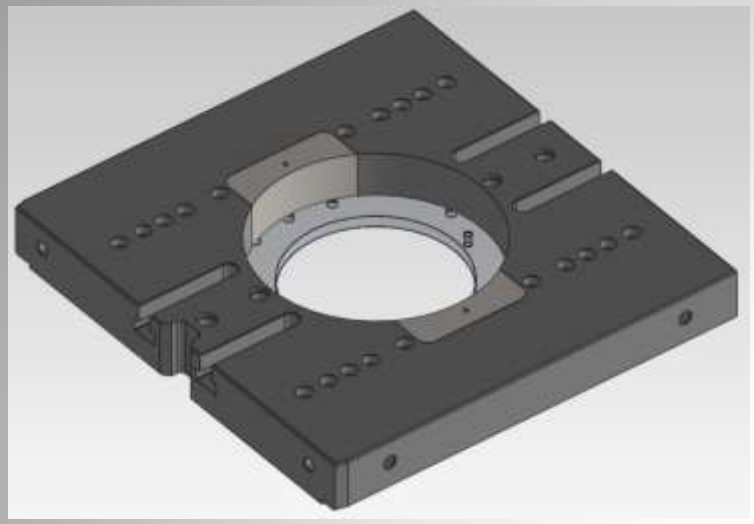

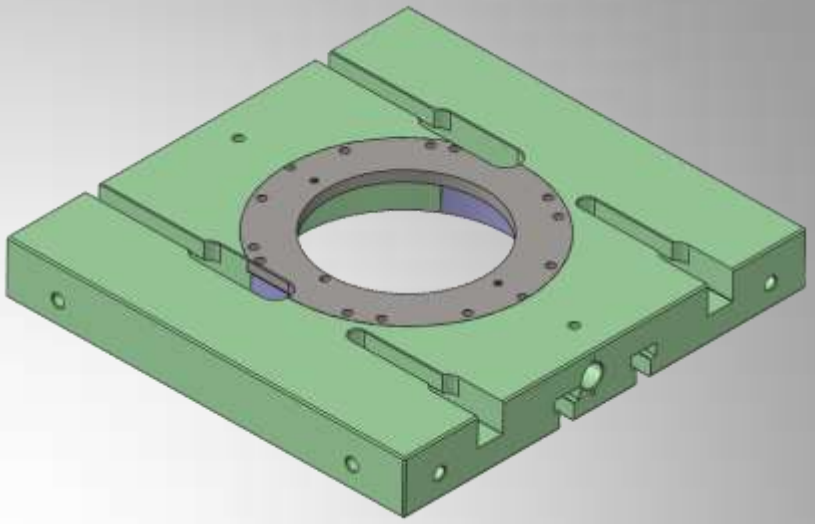

HFA-7000 UPPER DIE HOLDER PLATE

HFA-7000 LT DIE HOLDER PLATE

HFA-6300 LOWER SLIDE SUPPORT FUSION

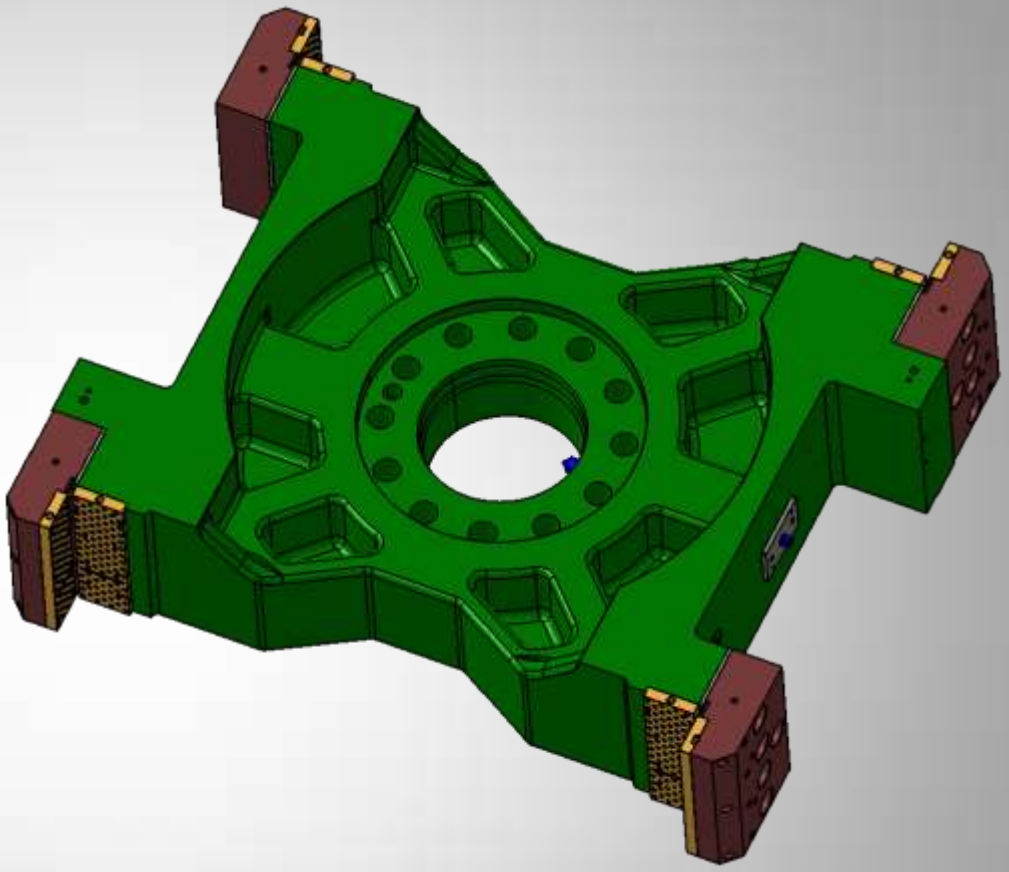

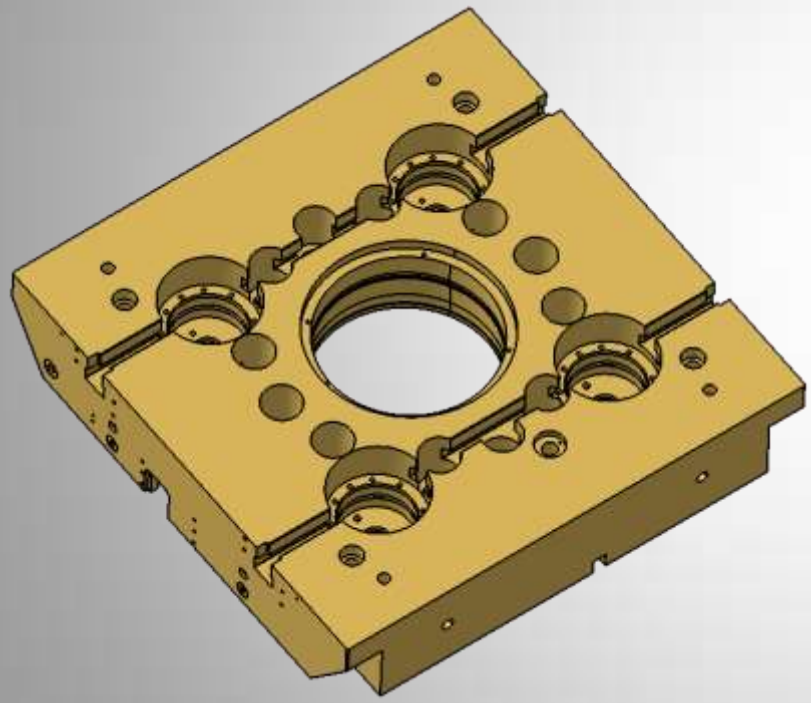

HFA-7000 PLUS UPPER PLATE

HFA-7000 PLUS
ASSEMBLY OF QUICK
LOCKING DIE HOLDER PLATE

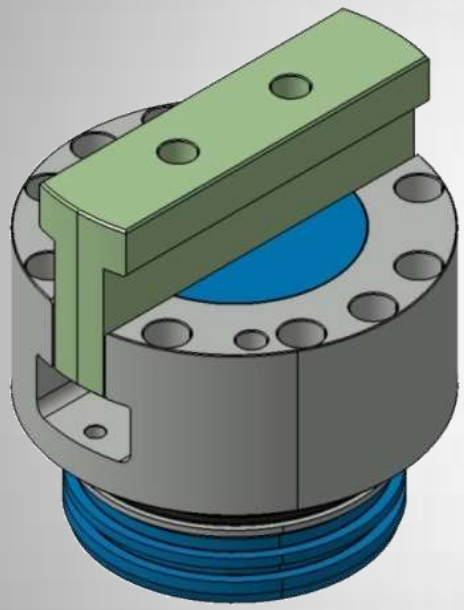

HFA-6300
ASSEMBLY OF QUICK
LOCKING DIE HOLDER PLATE

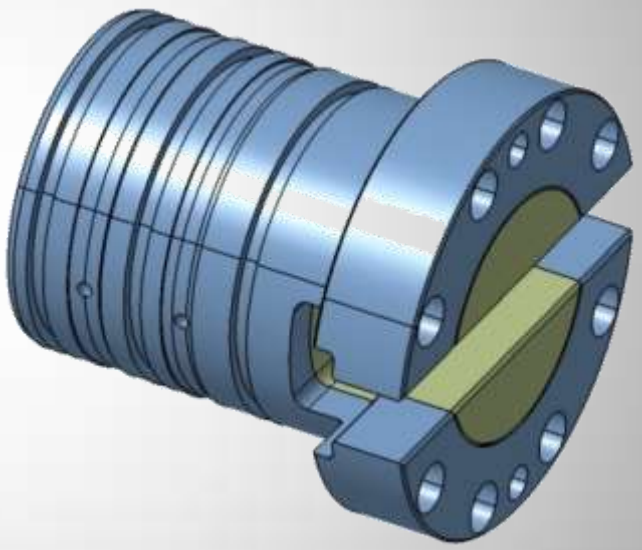

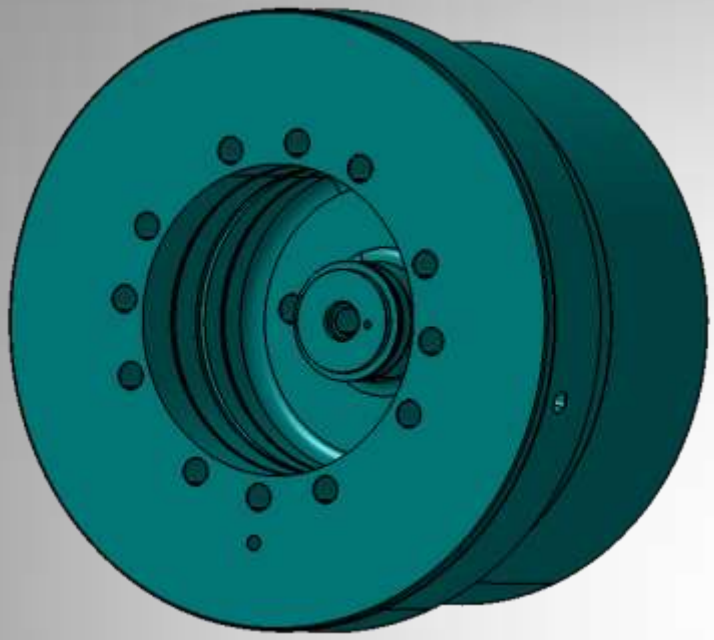

HFA-7000 PLUS COUNTER PRESSURE CYLINDER

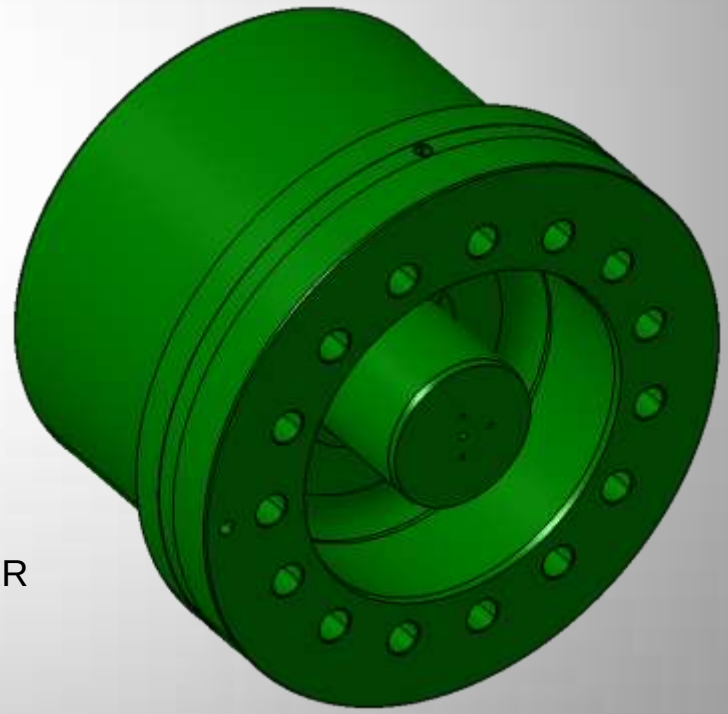

HFA-6300 COUNTER PRESSURE CYLINDER

HFA-7000 PLUS MAIN CYLINDER SKIRT

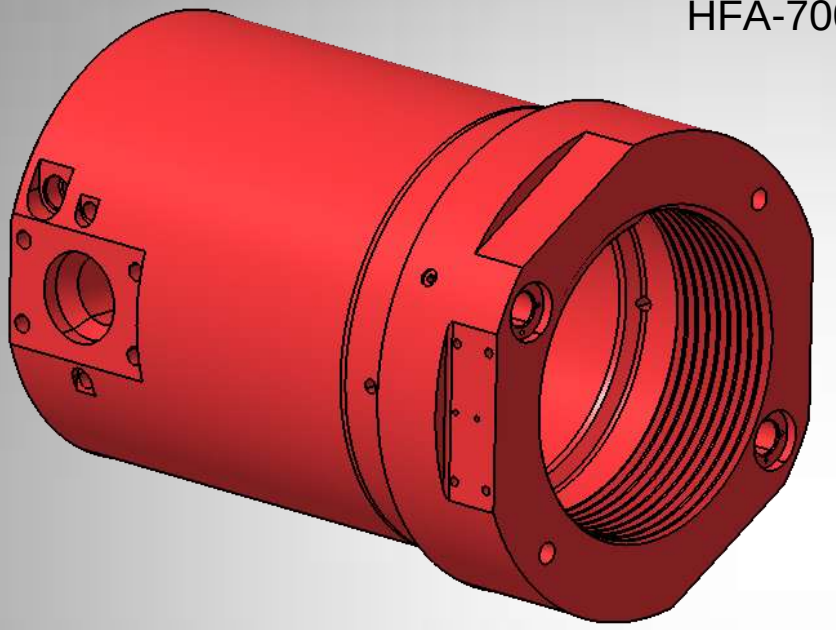

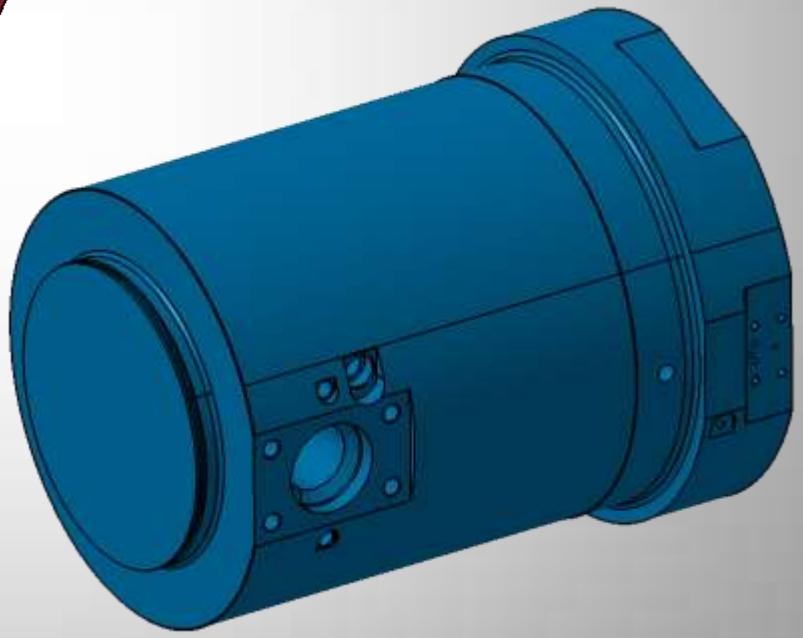

HFA-6300 MAIN CYLINDER SKIRT

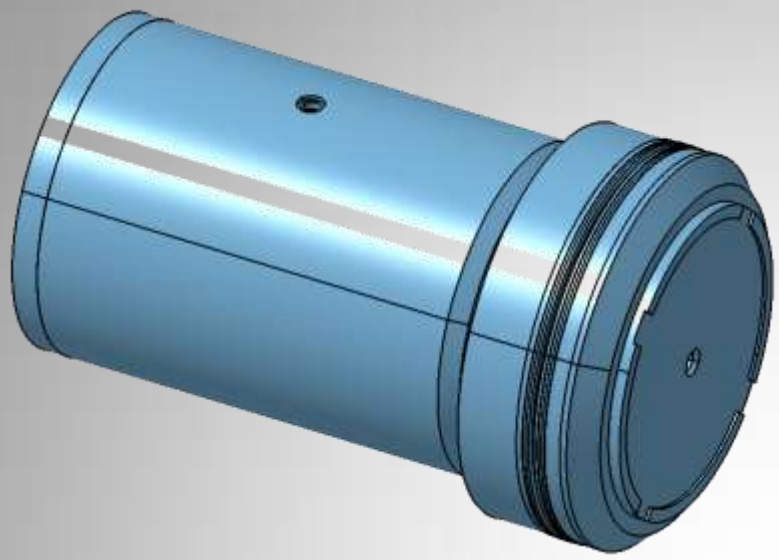

HFA-7000 PLUS MAIN PISTON

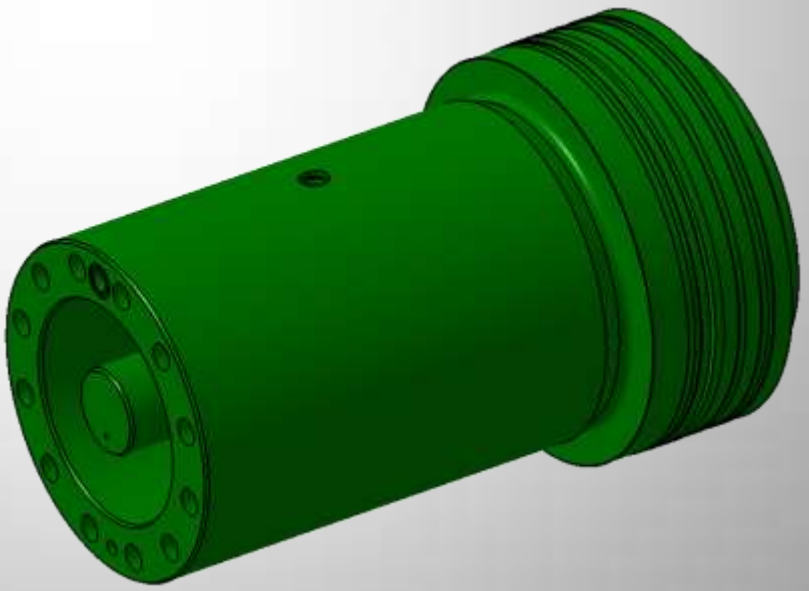

HFA-6300 MAIN PISTON

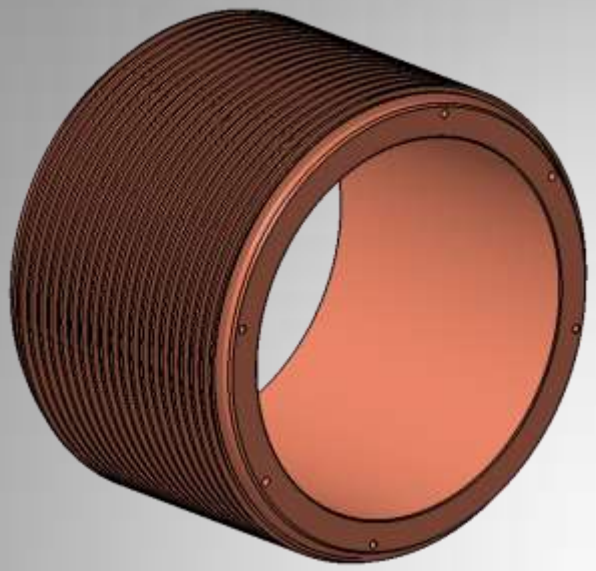

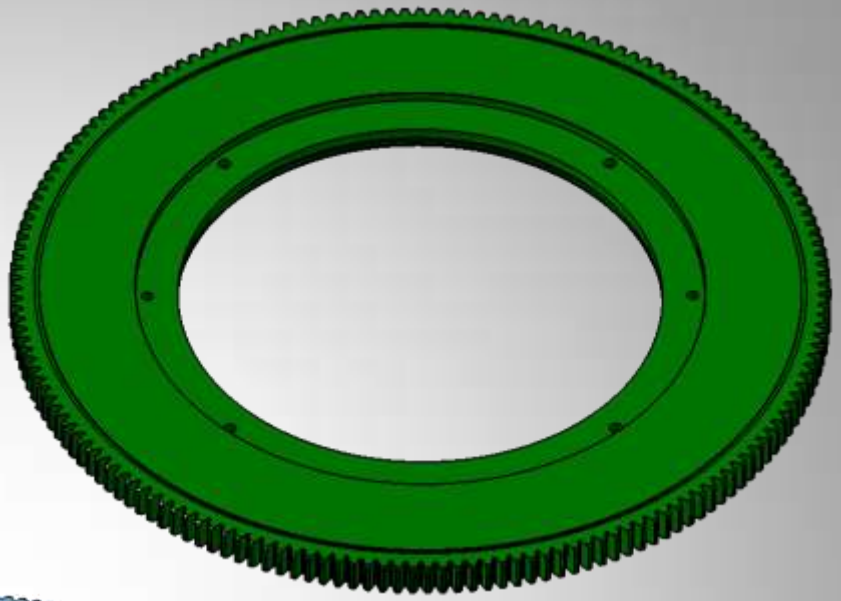

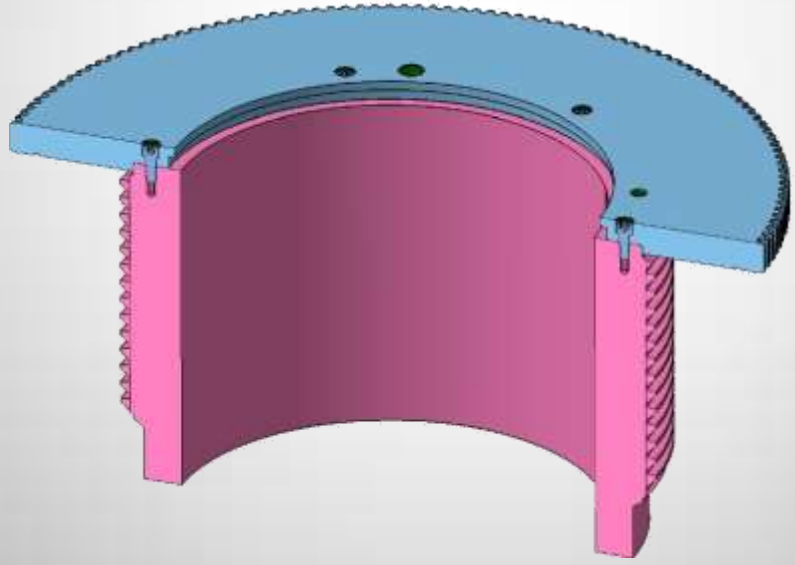

HFA-7000 PLUS REGULATING SCREW AND CROWN

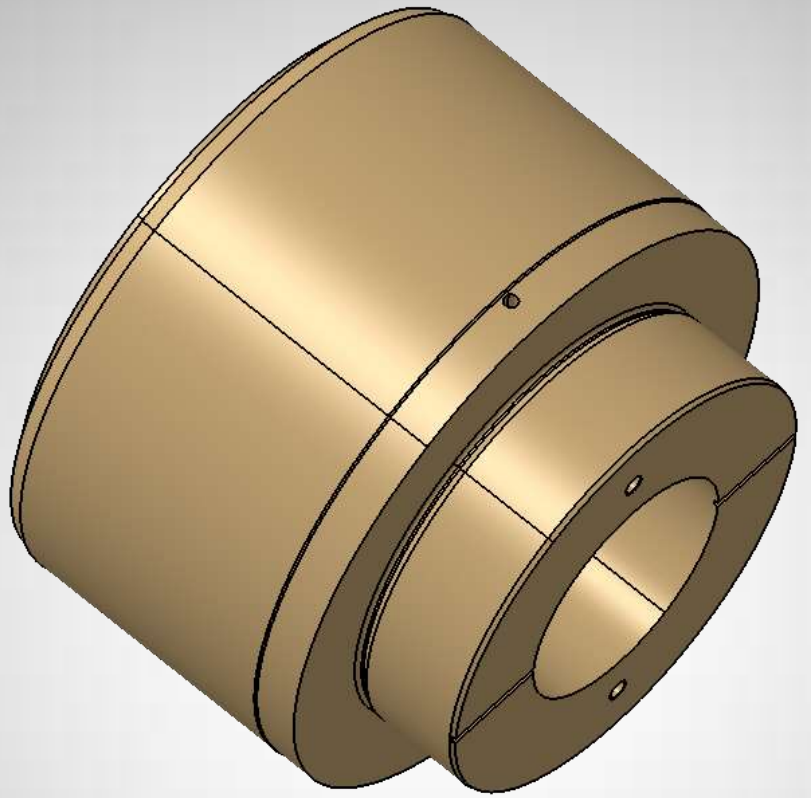

HFA-7000 PLUS UPPER COUNTER PRESSURE PISTON

HFA-7000 PLUS LOWER COUNTER PRESSURE PISTON

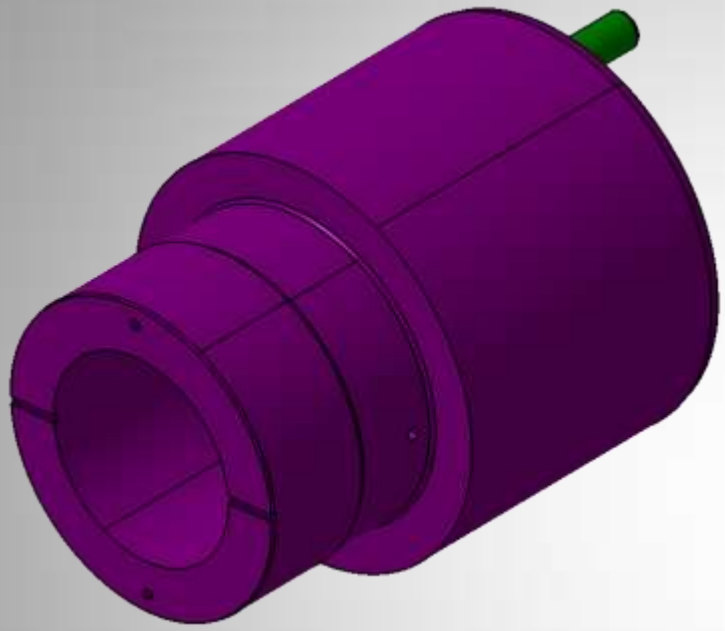

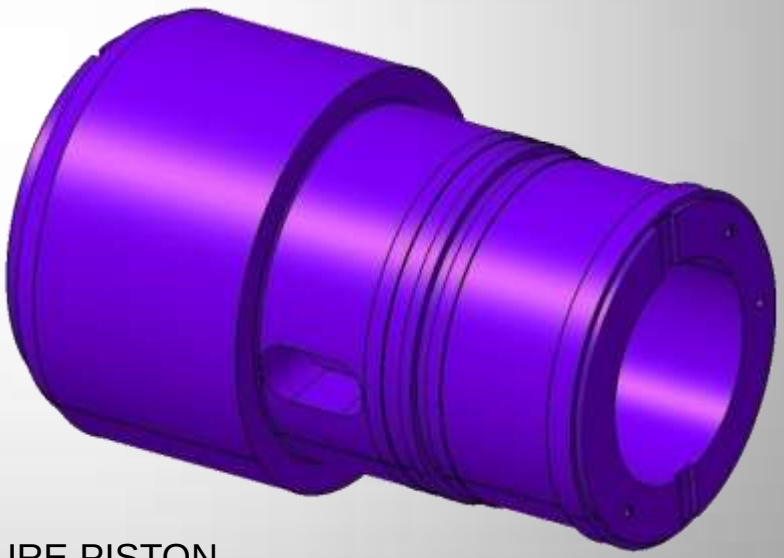

HFA-6300 LOWER COUNTER PRESSURE PISTON

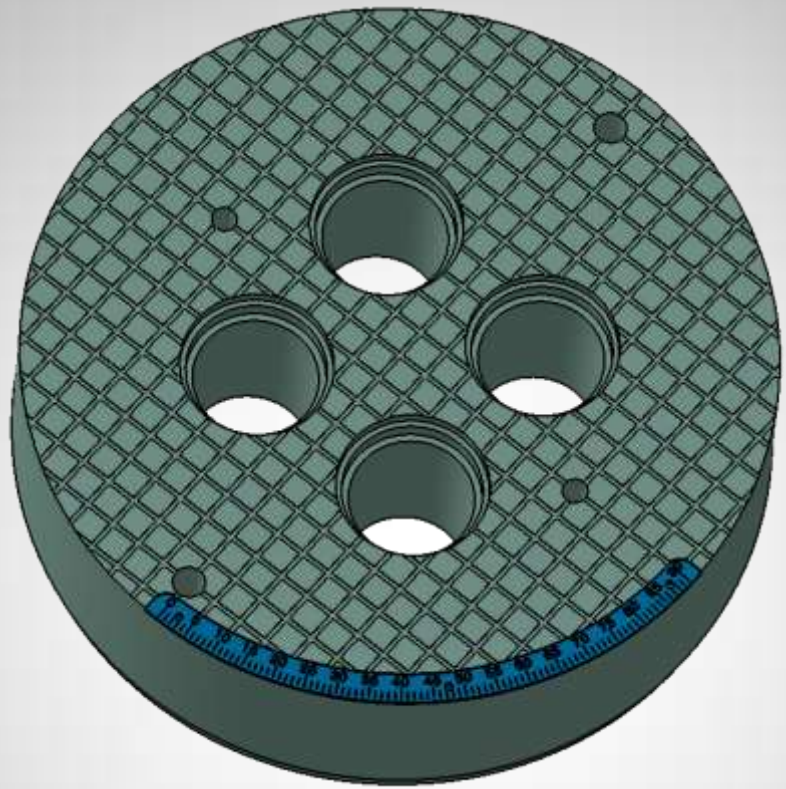

HFA-7000 PLUS LOWER GRADUATED CENTRAL RING

PRESSE MECCANICHE GKP
GKP MECHANICAL PRESSES

ALBERO SCANALATO CON VITE SENZA FINE PER PRESSA MECCANICA GKP-160

SPLINE SHAFT WITH WORM FOR GKP-160 MECHANICAL PRESS

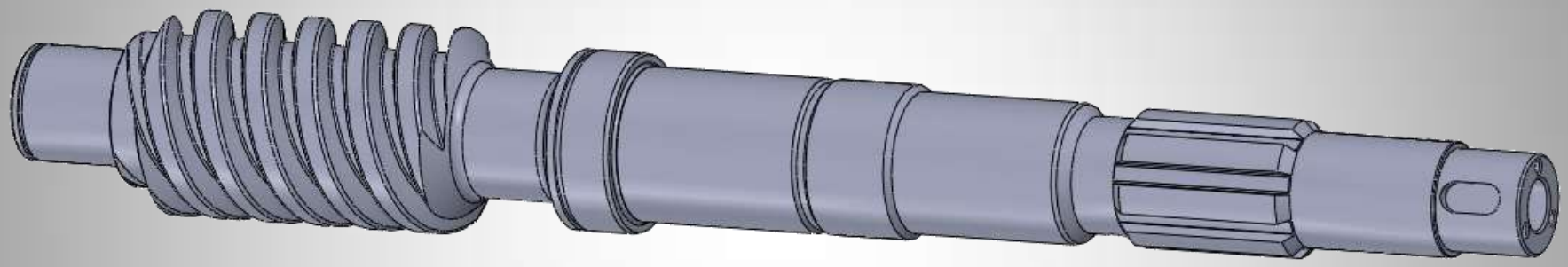

INGRANAGGIO TRASMISSIONE PRESSA MECCANICA GKP-160
COGWHEEL FOR GKP-160 MECHANICAL PRESS

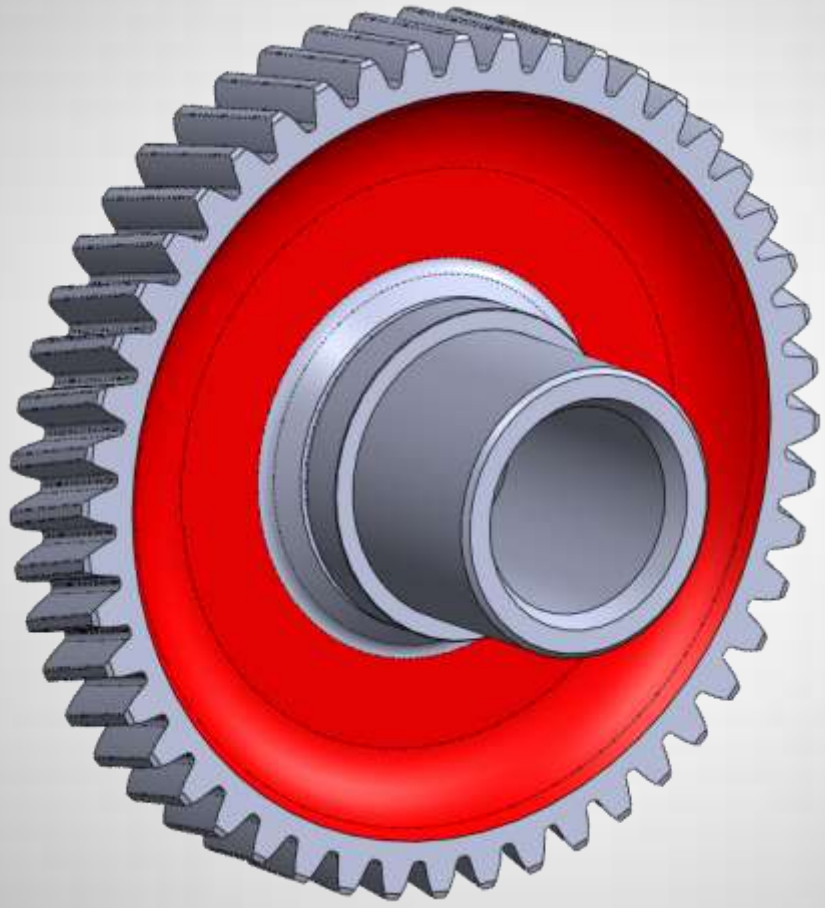

GINOCCHIERE PRESSA MECCANICA GKP-160

TOGGLE JOINT FOR GKP-160 MECHANICAL PRESS

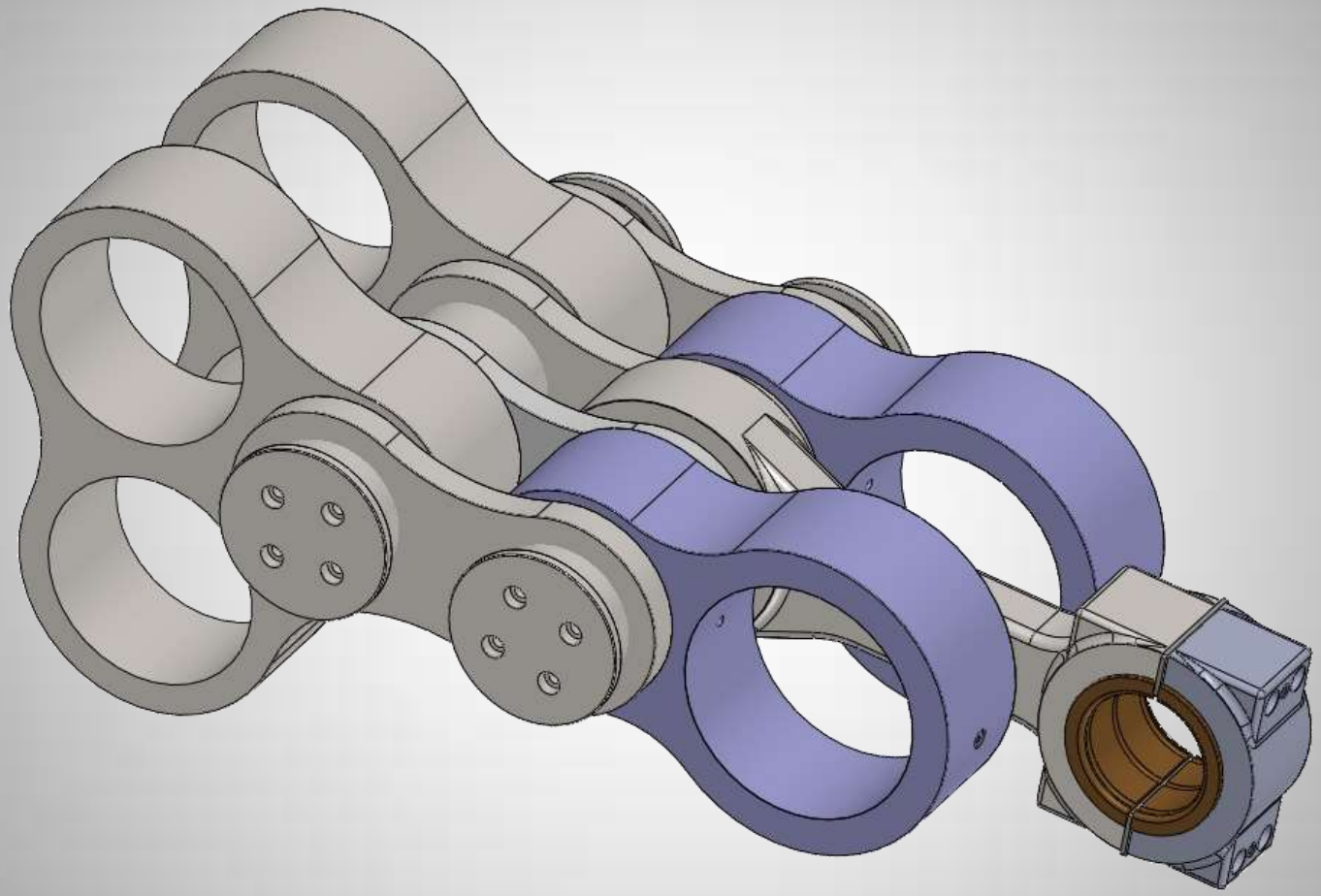

ALBERI ECCENTRICI PRESSA MECCANICA GKP-160
ECCENTRIC SHAFTS FOR GKP-160 MECHANICAL PRESS

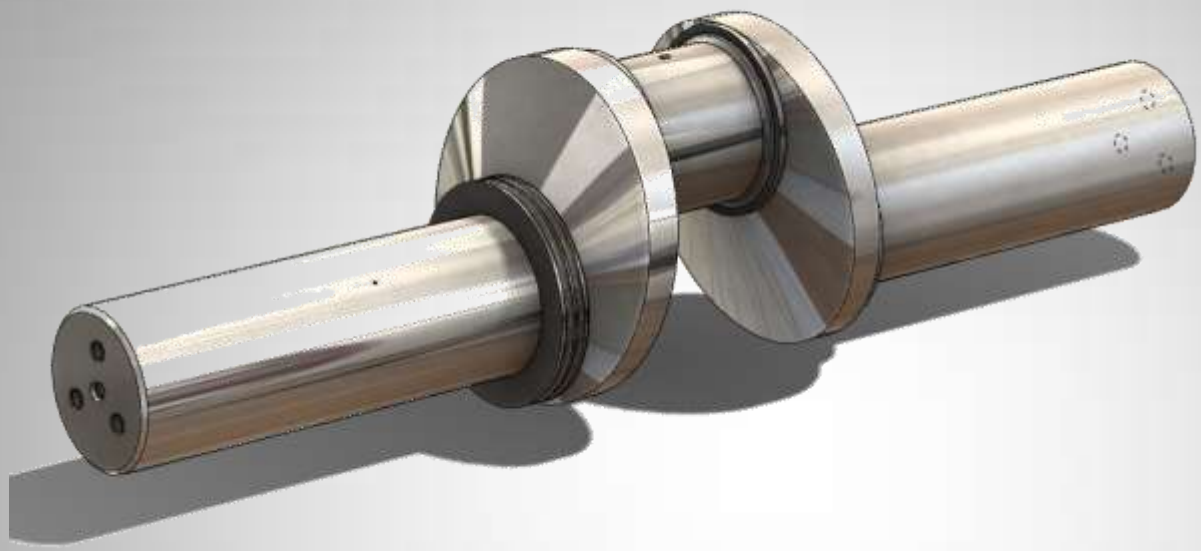

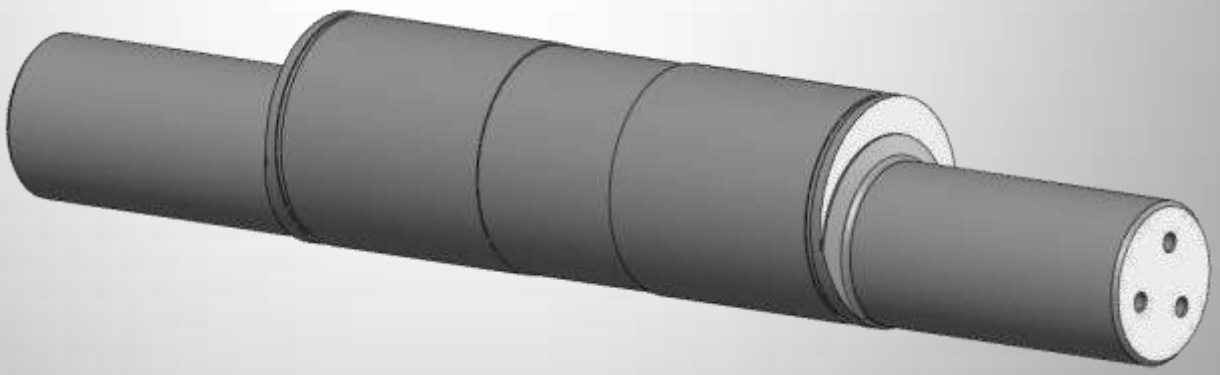

MAZZA PRESSA MECCANICA GKP-160
RAM FOR GKP-160 MECHANICAL PRESS

GRUPPO TAVOLA INFERIORE PRESSA MECCANICA GKP-160

ASSEMBLED LOWER DIE PLATE FOR GKP-160 MECHANICAL PRESS

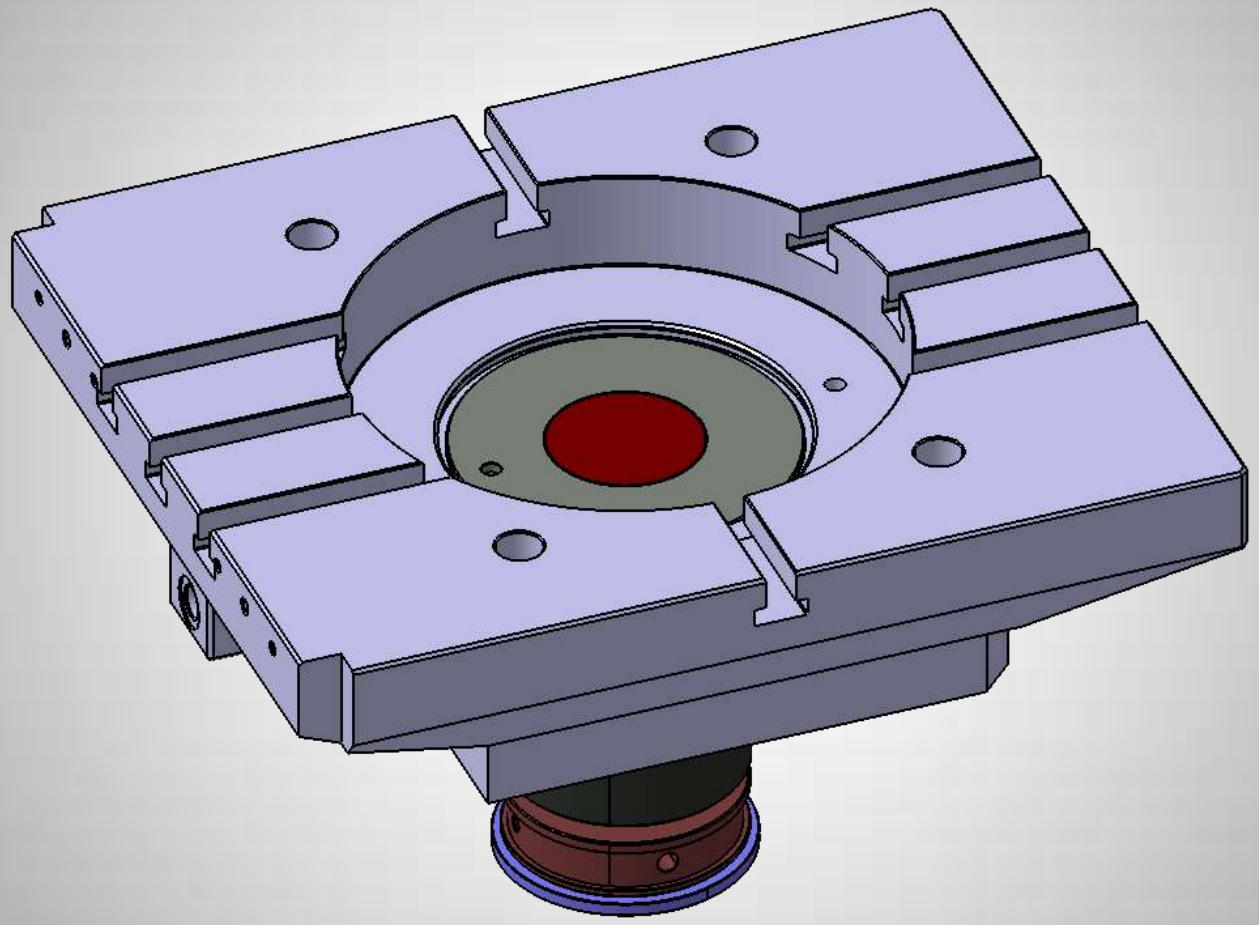

MECCANICA PER PRESSA IDRAULICA HSR
MECHANICAL PARTS FOR HSR HYDRAULIC PRESS

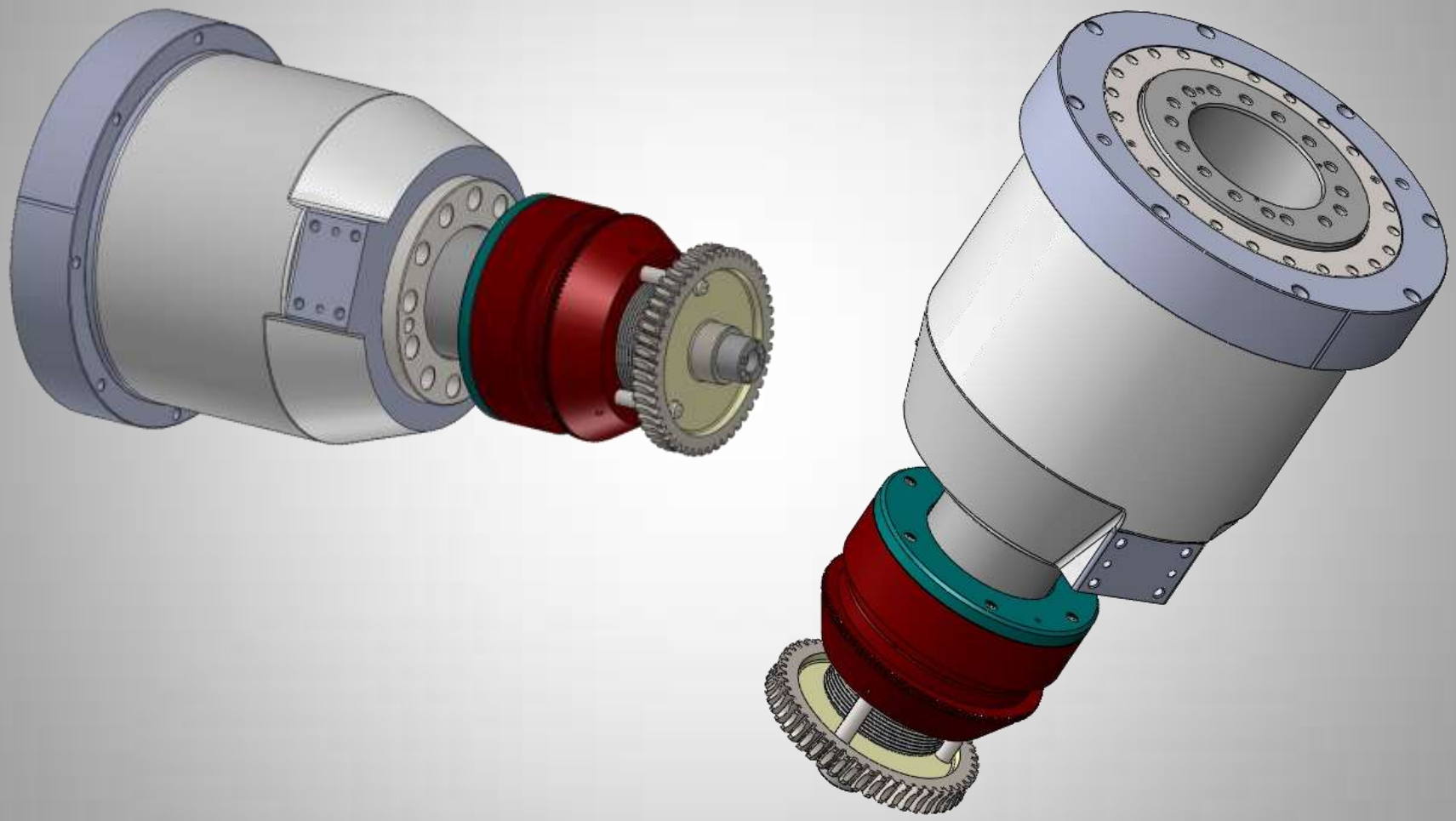

RADDRIZZATRICI “BERTORELLO”
“BERTORELLO” SHEET METAL STRAIGHTENER

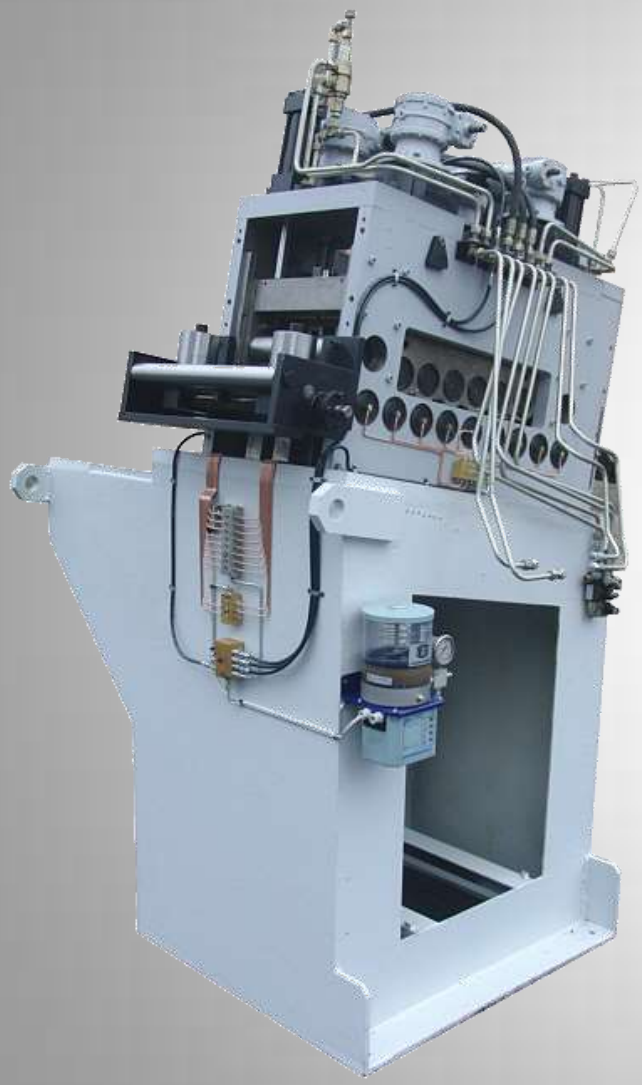

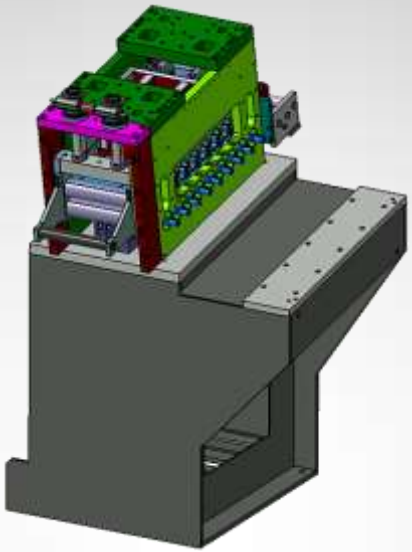

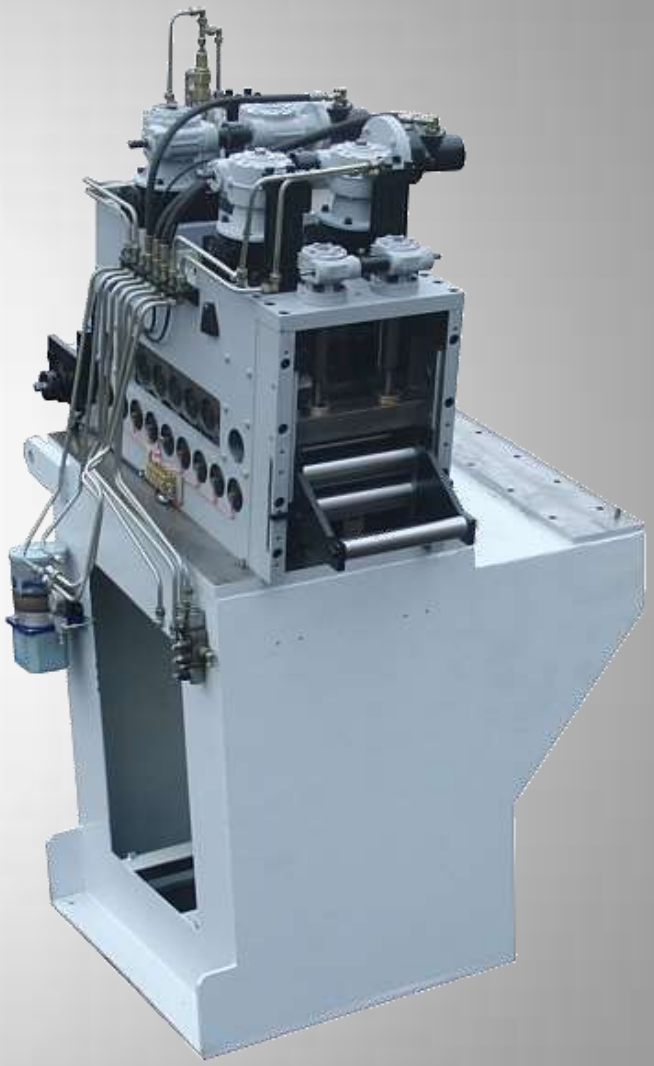

CONTROLLO PLC
CONTROL UNIT

ALBERI ECCENTRICI
ECCENTRIC SHAFTS

INGRANAGGI BI-ELICOIDALI
HELICAL GEARS

BIELLE
PISTON ROD